MOTOR TRANSCEIVER

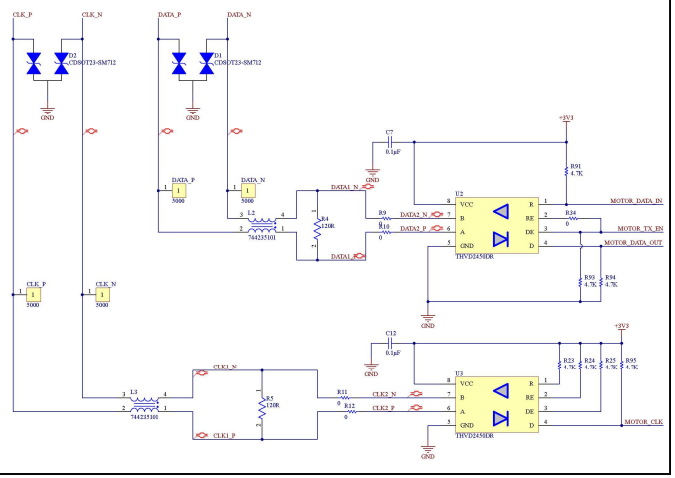

MOTOR TEMPERATURE

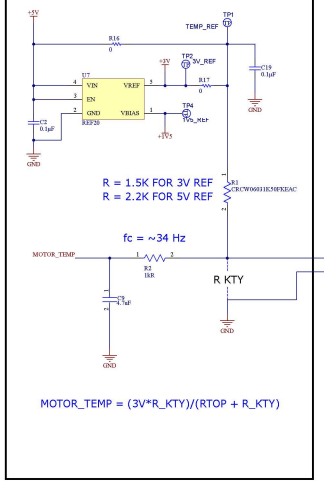

MOTOR_TEMP = (3V*R_KTY)/(RTOP + R_KTY)

MOTOR CONNECTOR

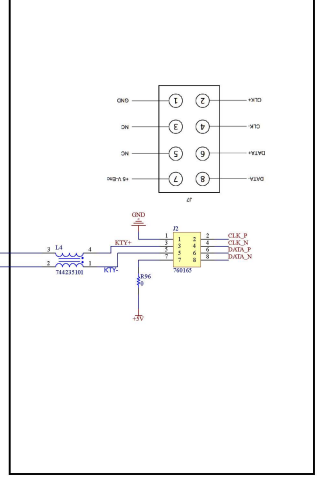

MAIN POWER INPUT (24V TO 5V)

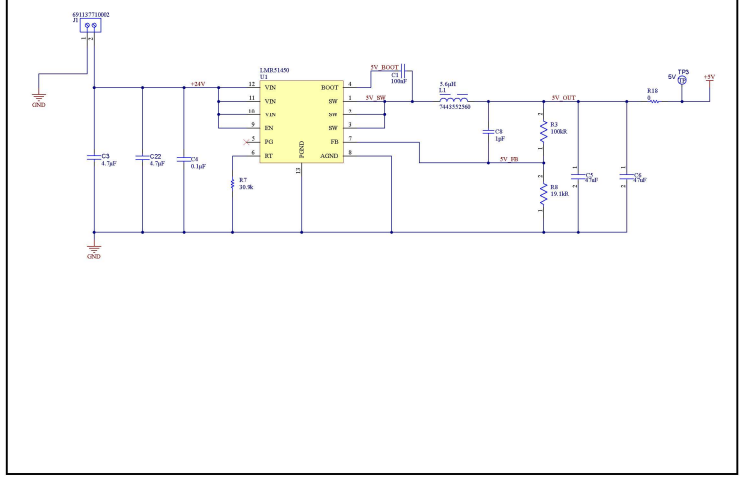

CURRENT SENSE

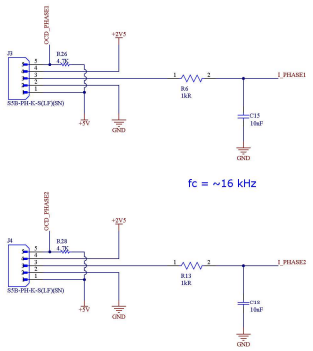

TEMP SENSOR

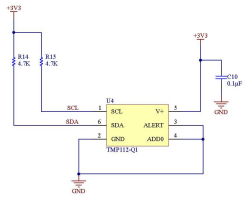

VOLTAGE REFERENCE (2V5)

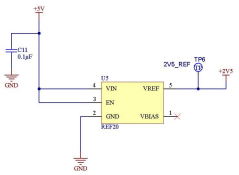

5V TO 3V3

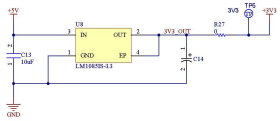

INDICATORS

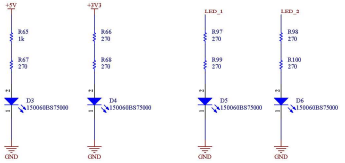

MAC Formula Electric
1280 Main St. West
Hamilton, ON

Interposer Board

Drawn: *
Checked: *
Size: D
Date: 2025-03-28
Sheet 1 of 2

DEVKIT CONNECTORS

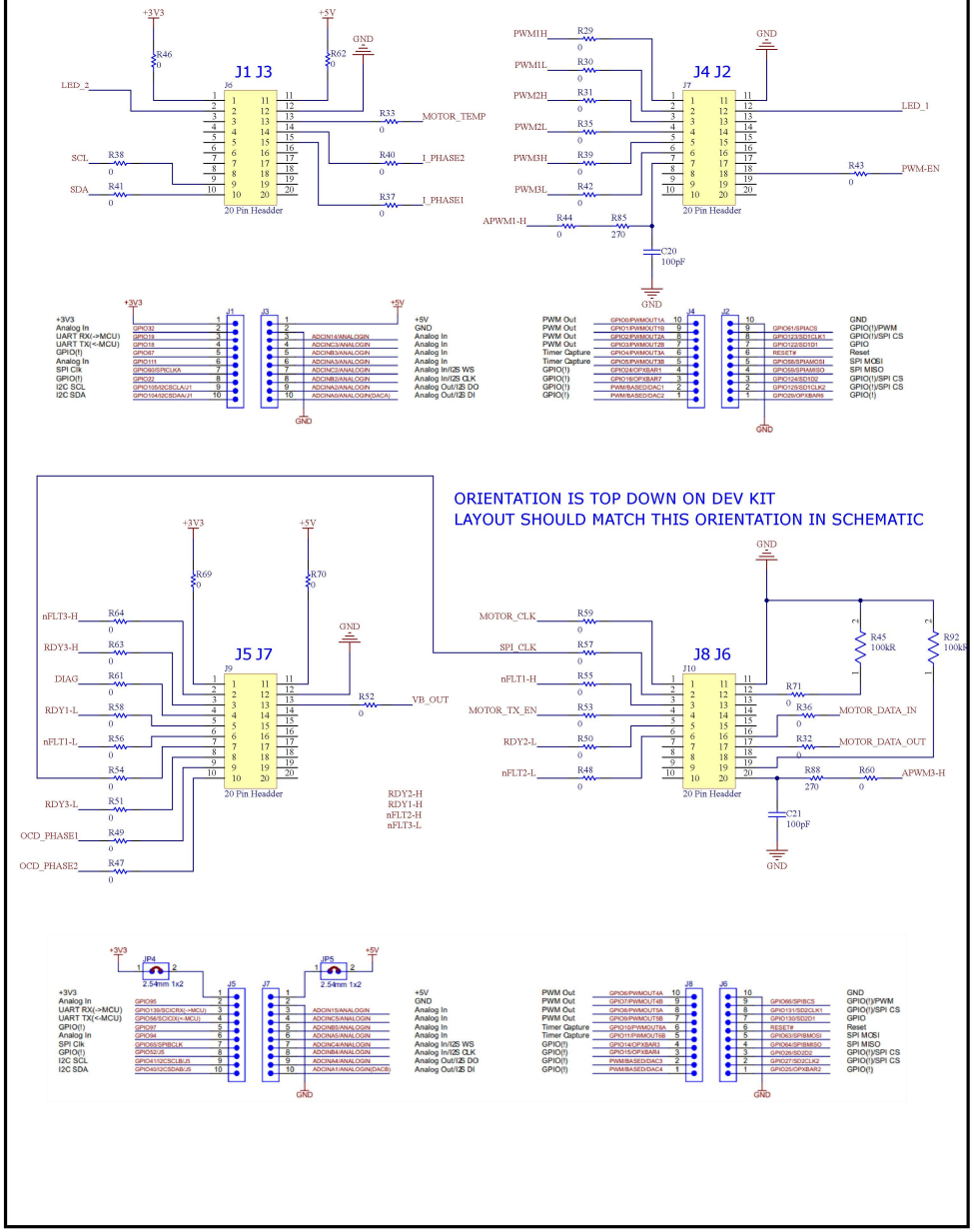

GATE DRIVER CONNECTORS

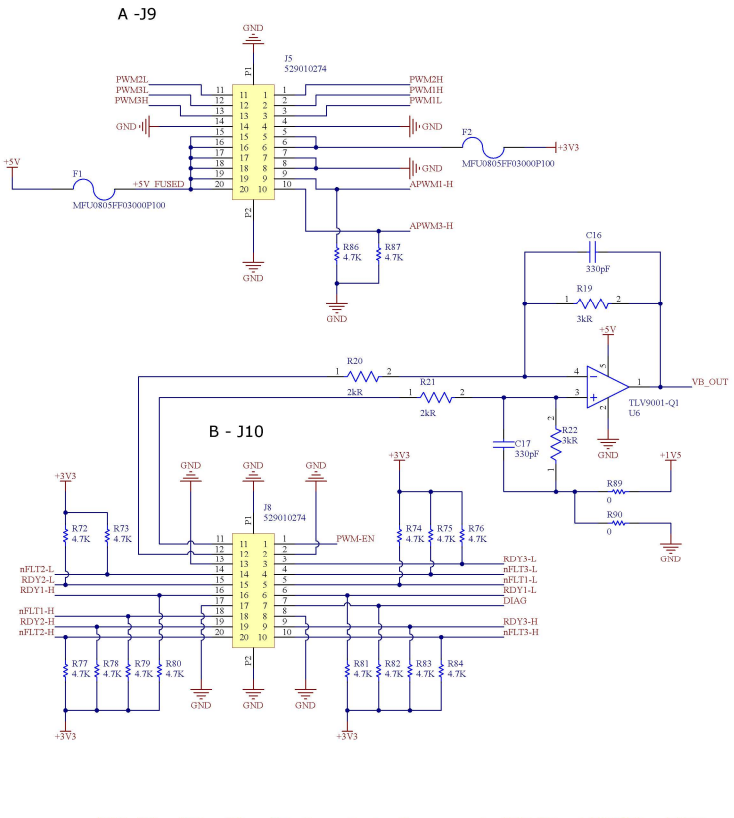

Controller Board Connector A

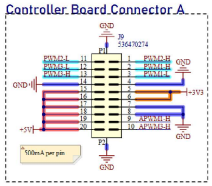

Controller Board Connector B

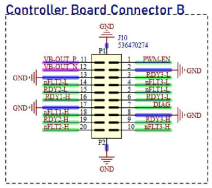

CAN CONNECTIONS

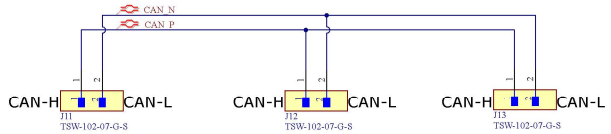

INTO BOARD | DEV KIT | TO NEXT BOARD

MAC Formula Electric
1280 Main St. West
Hamilton, ON

Title: Interposer Board

Drawn: *
Checked: *
File: Interfaces.SchDoc
Size: C
Date: 2026-03-26
Sheet 2 of 2